Civic and Residential Settlement at a Late Preclassic Maya Center

Vernon L. Scarborough
University of Texas at El Paso

Robin A. Robertson
Southern Methodist University
Dallas, Texas

The Late Preclassic period in the Maya Lowlands (300 B.C.–150 A.C.) documents the transition toward increased social and economic complexity culminating in the Classic Maya civilization (250–900 A.C.). The Late Preclassic Maya community of Cerros in northern Belize has revealed a settlement pattern of dispersed household clusters and scattered public architecture. Moreover, the site manifests a clear, three-part concentric zonation, similar to later Classic period communities. The authors' analysis provides a definition through time of civic and residential architecture and of the division between elite and non-elite domiciles. The study draws heavily on a functional analysis of the excavated ceramic assemblage. The unique settlement pattern of the semitropical Maya is suggested to be an environmental adaptation with rural elites coordinating the dispersed sustaining population through public monuments and associated ritual.

Introduction

The Late Preclassic period in the Maya Lowlands has been viewed as a transitional period in which levels of social complexity developed from chiefdoms into state-like institutions.[1] This transition in other areas of the world has involved marked changes in settlement form and density, giving rise to nucleated cities.[2] In the Maya Lowlands, however, the spatial organization of the community did not change radically from that of its Late Preclassic antecedents. Although public and private building styles were altered significantly through time, the overall settlement pattern was always composed of dispersed household clusters. At the sites of Tikal,[3] Dzibilchaltun,[4] Altar de Sacrificios,[5] Seibal,[6] Barton Ra-

1. R. E. W. Adams, ed., *The Origins of Maya Civilization* (University of New Mexico Press: Albuquerque 1977); W. R. Coe, "Tikal, Guatemala, and Emergent Maya Civilization," *Science* 147 (1965) 1401–1419; D. A. Freidel, "Culture Areas and Interaction Spheres: Contrasting Approaches to the Emergence of Civilization in the Maya Lowlands," *AmAnt* 44 (1979) 36–54.

2. W. T. Sanders, J. R. Parsons, and R. S. Santley, *The Basin of Mexico: Ecological Processes in the Evolution of a Civilization* (Academic Press: New York 1979); K. V. Flannery and J. Marcus, eds., *The Cloud People: Divergent Evolution of the Zapotec and Mixtec Civilizations* (Academic Press: New York 1983); R. M. Adams, *Heartland of Cities* (University of Chicago Press: Chicago 1980); Kwang-Chih Chang, *The Archaeology of Ancient China* (Yale Press: New Haven 1977); B. J. Kemp, "The Early Development of Towns in Egypt," *Antiquity* 51 (1977) 185–200; M. E. Moseley and K. C. Day, eds., *Chan Chan: Andean Desert City* (University of New Mexico Press: Albuquerque 1982); B. Allchin and R. Allchin, *The Rise of Civilization in India and Pakistan* (Cambridge University Press: Cambridge 1982).

3. W. R. Coe, *Tikal: a Handbook of the Ancient Maya Ruins* (University Museum, University of Pennsylvania: Philadelphia 1967); D. E. Puleston, *The Settlement Survey of Tikal. Tikal Report* 13, *University Museum Monographs* (University of Pennsylvania: Philadelphia 1983); R. F. Carr and J. E. Hazard, *Map of the Ruins of Tikal, El Petén, Guatemala. Tikal Report* 11, *University Museum Monographs* (University of Pennsylvania: Philadelphia 1961).

4. E. B. Kurjack, *Prehistoric Lowland Maya Community and Social Organization. Middle American Research Institute Publication* 38 (Tulane University: New Orleans 1974); E. W. Andrews V, "Dzibilchaltun," in J. A. Sabloff, ed., *Supplement to the Handbook of Middle American Indians* 1 (University of Texas Press: Austin 1981) 313–344.

5. G. R. Willey and A. L. Smith, *The Ruins of Altar de Sacrificios. PapPeaMus* 62, No. 1 (Harvard University: Cambridge 1969); A. L. Smith, *Excavations at Altar de Sacrificios. PapPeaMus* 62, No. 2 (Harvard University: Cambridge 1972).

6. G. R. Willey, A. L. Smith, G. Tourtellot III, and I. Graham, *Excavations at Seibal. MemPM* 14, No. 1 (Harvard University: Cambridge 1975); G. Tourtellot, "The Peripheries of Seibal: an Interim

mie,[7] Becan,[8] Colha,[9] and the Lake Yaxha area,[10] there was little major settlement reorganization after the Late Preclassic despite an increase in the size and density of these communities during the Classic period. Nucleated cities were the exception rather than the rule.[11] Given the sociopolitical heights to which the Maya were to aspire, the absence of a spatially well-controlled constituency has mistakenly contributed to the notion of the "mysterious" character of Maya civilization.

The community of Cerros in present-day northern Belize (FIG. 1) has recently revealed a settlement pattern dating to this transitional period.[12] The site is unique in having been a Late Preclassic community with little subsequent Classic and Postclassic construction. Consequently, the data permit a closer inspection of the transition and provide a baseline for assessing the subtleties involved in the development of later centers.

The dichotomy between civic monumental architecture and residential architecture has provided the best evidence for shifts in settlement which did occur during the Late Preclassic. The early facet of the Late Preclassic at Cerros manifests a relatively small portion of the total public architecture found at the site. The little monumental architecture that does occur is associated with an open central precinct. Residential structures make up the bulk of the architecture at this early date, and they are clustered near the present-day bay. Divisions between elite and non-elite seem not to have been very great. During the late facet of the Late Preclassic, the civic architecture increased in size, frequency of appearance, and complexity; though there was a slight closure of space within a well-defined central precinct, a considerable amount of civic architecture was constructed away from this zone. Although the growing elite may have deliberately begun delimiting the central precinct and thereby made it less accessible, the remainder of the community appears to have incorporated a more open display of civic architecture. Outside the central precinct, access by the people to many public activities was maintained. The construction of a curvilinear, 1200-m canal and its apparent function as a territorial marker provided a degree of controlled access for the greater core zone, but the scattered pattern of civic architecture within this residential zone was well maintained. Despite the increasing differentiation of elites and non-elites, the two groups shared the core zone defined by the canal. Before the implications of this settlement design are discussed, a description of the settlement pattern and the data-gathering methodologies that are not fully presented elsewhere[13] seems appropriate.

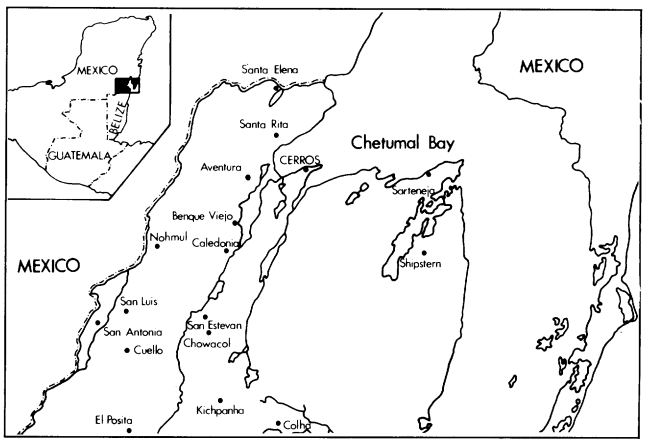

Figure 1. Map of northern Belize.

Survey Design

Three kinds of survey were employed on Lowry's Bight and the adjacent land. Beginning with reconnaissance, each level of survey reduced the amount of terrain examined but increased the accuracy and intensity of survey control.

Report," in W. R. Bullard, ed., *Monographs and Papers in Maya Archaeology. PapPeaMus* 61 (Harvard University: Cambridge 1970) 405–421.

7. G. R. Willey et al., *Prehistoric Maya Settlement in the Belize Valley. PapPeaMus* 54 (Harvard University: Cambridge 1965).

8. P. M. Thomas, Jr., *Prehistoric Maya Settlement Patterns at Becan, Campeche, Mexico. Middle American Research Institute Publication* 45 (Tulane University: New Orleans 1981); D. L. Webster, *Defensive Earthworks at Becan, Campeche, Mexico. Middle American Research Institute Publication* 41 (Tulane University: New Orleans 1976).

9. H. J. Shafer and T. R. Hester, "Ancient Maya Chert Workshops in Northern Belize, Central America," *AmAnt* 48 (1983) 519–543; J. D. Eaton, "Colha: an Overview of Architecture and Settlement," in T. R. Hester, H. J. Shafer, and J. D. Eaton, eds., *Archaeology at Colha, Belize: the 1981 Interim Report* (Center for Archaeological Research, University of Texas: San Antonio 1982) 11–20.

10. D. S. Rice and P. M. Rice, "The Northeast Petén Revisited," *AmAnt* 45 (1980) 432–454.

11. Dense prehistoric populations comparable to those defined in Highland Mexico are reported for the two late period sites of Chunchucmil and Mayapán. D. T. Vlcek, S. Garza T., and E. B. Kurjack, "Contemporary Farming and Ancient Maya Settlement: Some Disconcerting Evidence," in P. D. Harrison and B. L. Turner II, eds., *Prehispanic Maya Agriculture* (University of New Mexico Press: Albuquerque 1978) 211–224; H. E. D. Pollock, R. L. Roys, T. Proskouriakoff, and A. L. Smith, *Mayapán, Yucatán, Mexico. CarnInstPub* 619 (Washington, D.C. 1962).

12. V. L. Scarborough, "A Preclassic Maya Water System," *AmAnt* 48 (1983) 720–744.

13. Ibid.; Freidel, loc. cit. (in note 1); idem, "Civilization as a State of Mind: the Cultural Evolution of the Lowland Maya," in G. D. Jones and R. R. Kautz, eds., *The Transition to Statehood in the New World* (Cambridge University Press: Cambridge 1981) 188–227.

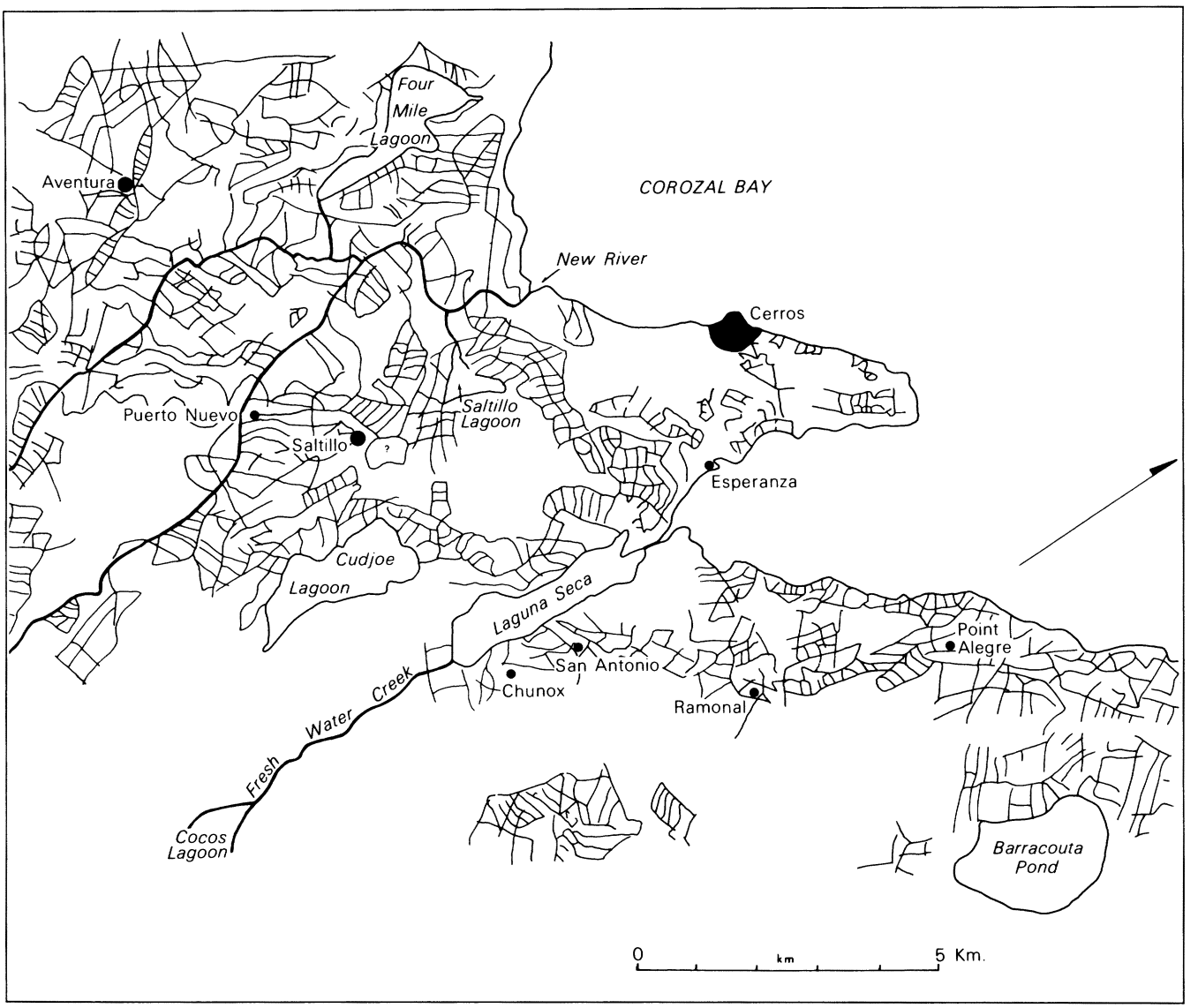

Figure 2. Map of Lowry's Bight and adjacent archaeological sites. The size of the black dot reflects the estimated size of these sites relative to Cerros. The SAR readout, provided by R. E. W. Adams, was subjectively filtered for tight lattice and dendritic patterns. Survey data were collected by reconnaissance methods.

Reconnaissance

Broad reconnaissance of the 10 sq km defining the penisula was conducted by land, sea, and air. Additional site-oriented survey was carried out near the immediate margins of the bight. Although these operations involved little more than a camera, a compass, graph paper, and a sharp machete, they provided the interpretive backdrop for the more systematic program. Figure 2 illustrates the number and location of Late Preclassic sites near Cerros. Except for the Postclassic community of Esperanza on the opposite side of the bight, all of the sites have a Late Preclassic component, based on their ceramic collections. The side-looking airborne readout (SAR) is believed to represent ancient canals of uncertain date.[14]

Systematic Survey Area

The second kind of survey was conducted around and within the site zone of Cerros. Although no formal ex-

14. V. L. Scarborough, "Raised Field Detection at Cerros, Northern Belize," *Drained Field Agriculture in Central and South America. BARSupp* 189 (Oxford 1983); R. E. W. Adams, W. E. Brown, Jr., and T. P. Culbert, "Radar Mapping, Archaeology, and Ancient Maya Land Use," *Science* 213 (1981) 1457–1463.

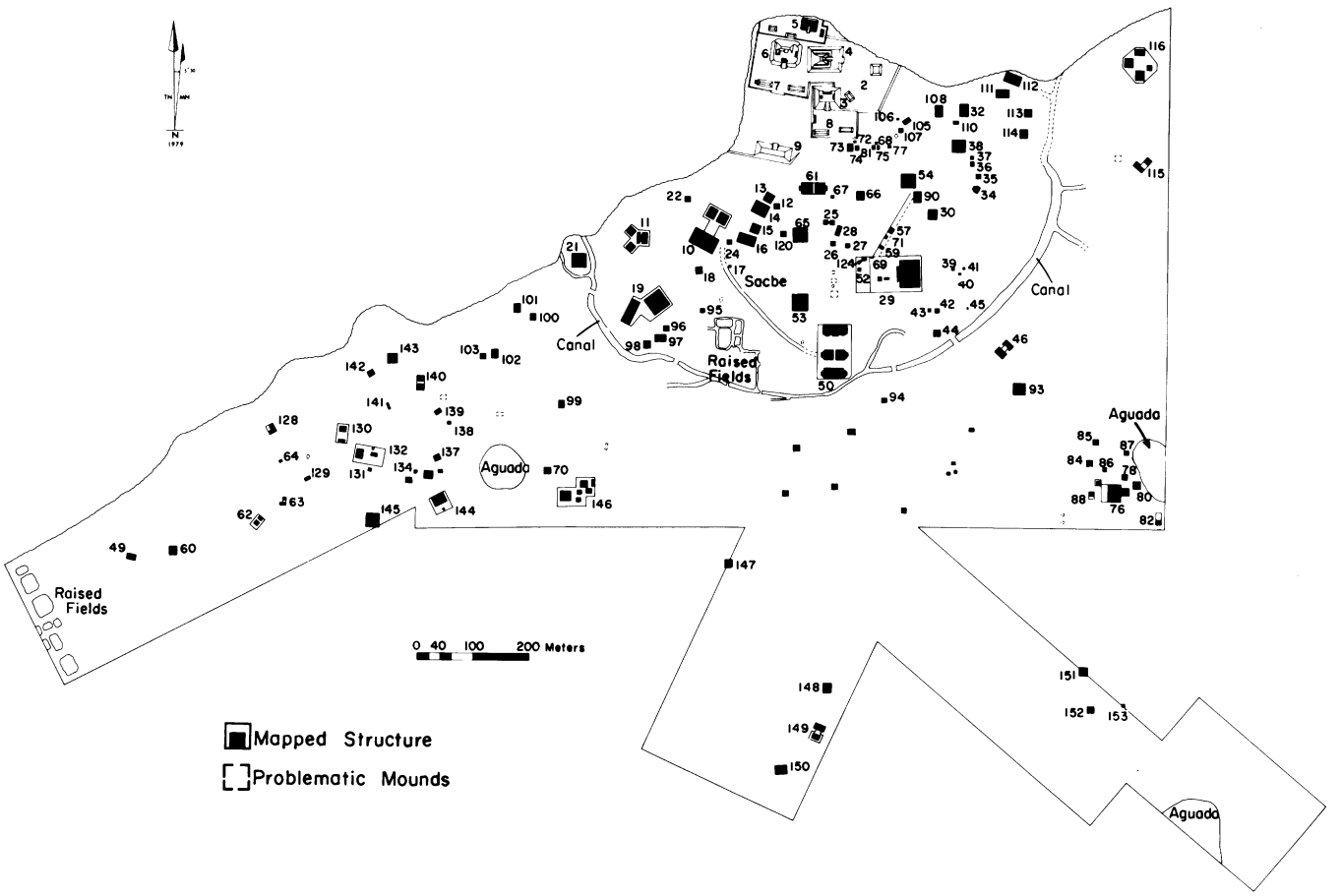

Figure 3. Map of Cerros.

cavations were done in this area, a systematic transit and alidade survey was employed to accurately map structure density as well as environmental relationships. The 1.51 sq km area enclosed by the survey tract involved clearing over 26 sq km of *brecha,* or bush trails, during which 181 mounded features were uncovered.

The dense secondary vegetation on the bight necessitated the use of an on-the-ground grid system cut through the foliage and across the site. The north-oriented, 100-m interval grid provided the framework for structure location. The survey team within each circumscribed hectare surveyed the bush on foot, separated by 10–15 m. When a structure or related feature was located, an alidade map was rendered and tied into the grid system (FIG. 3).

The boundary of the systematic survey zone was arbitrarily defined. The area enclosed was comparable to that defined by the systematic survey and excavation zone around the site. In addition to the contiguous southern block, three transects were cut into the interior of the bight, away from the site center. These transects were chosen to help discern the outer boundary of the community. Although the transects were minimally 200 m wide, the presence of old bush trails, the undulating edge of the coastline, and our attempts to reduce "boundary effects" in the sample,[15] increased their width by as much as 100 m.

Transect 1 extended 800 m from the systematic survey and excavation area along the coast. It was designed to examine the specific function of the coastline as a site boundary. Was it a civic or residential boundary and what economic implications would follow (see below)? Transect 2 was designed to bisect the long axis of the bight. It was hypothesized that if landward intruders were a threat, a defensive feature might be exposed near the base of the peninsula somewhere along the transect. Reconnaissance, however, suggested otherwise. After locating only four house mounds in the area systematically surveyed, which revealed a clear drop-off in mound density from the center of the community toward the edge, it was decided to terminate the transect.

15. I. Hodder and C. Orton, *Spatial Analysis in Archaeology* (Cambridge University Press: Cambridge 1976) 41.

Transect 3, 900 m long, was directed toward the large *Aguada* 2 (or pond), near the opposite side of the bight. Reconnaissance had indicated an early facet of Late Preclassic occupation at this location (Ixtabai, 300–200 B.C.). The transect was positioned to assess how discrete these two locations might have been and to determine the density of occupation in the vicinity of the aguada.

Systematic Survey and Excavation Area

The final kind of survey involved no change in the actual research design but did add the dimension of controlled excavation. This area encompassed 75 ha, half the total area enclosed by the systematic survey area, and is the focus of the remainder of this paper.

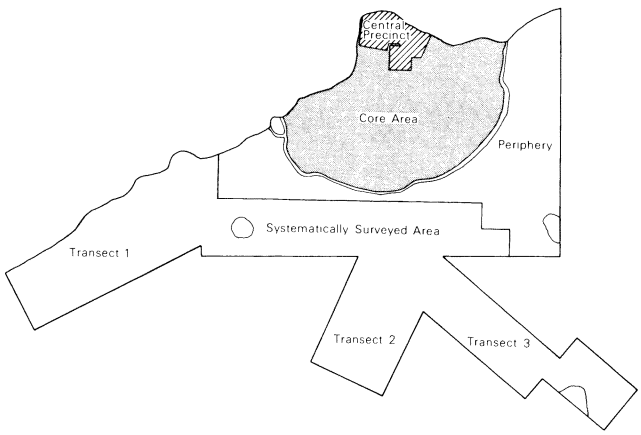

Figure 4. Map of Cerros zonation.

Settlement Pattern in Excavated Area

The three zones of civic and residential settlement at Cerros have been revealed in the systematic survey and excavation area (FIG. 4). Extending outward from the central precinct of monumental architecture, each zone represents a larger concentric area than does the zone before it. Structure density and structure size decrease correspondingly.

A three-ring volumetric zonation is also apparent at Cerros, suggesting the concentric zonation model (see below). The amount of fill necessary for the construction of a mound is understood to be one index of energy expenditure. Sixty-three percent of all architectural volume occurs in the 6 ha defining the central precinct. Approximately 22,184 cu m of fill per ha was used in the construction of the central precinct. Only one-tenth of this architectural volume per ha was manifest within the core zone, excluding the central precinct, and only one-hundredth of this architectural volume per ha was defined in the area outside the canal.

Central Precinct

The central precinct,[16] or center zone, covers 6 ha of raised plaza and associated monumental architecture. It was the most densely built-up area of the community, encompassing both monumental architecture and a nearby village nucleus. Excavations by Cliff[17] in the village nucleus indicate there were 86 ground-level houses in this area during the later part of the C'oh phase (100–50 B.C.). A density figure of 14.3 houses per ha has been derived from these data. During the Tulix phase (50 B.C.–150 A.C.), the village nucleus was buried by the construction of a two-meter-thick raised plaza, on which additional monumental architecture was constructed.

Most of the grand architecture at Cerros is concentrated in the central precinct, with over 133,000 cu m of rubble fill used in the construction of these buildings. Structure 4 is the largest single edifice, having basal dimensions of 58 m × 68 m and rising to a composite height of 22 m. The fill volume of this one structure is 32,038 cu m.

Core Zone

Surrounding the buried village nucleus and the central precinct of the site is a core zone of compact residential and civic structures. The arrangement of public and private space is less ordered than the planned appearance of the central precinct. The orientation of these structures, however, suggests that the buildings were constructed in a radial/radiating pattern focusing on the central precinct. This pattern is particularly evident in the western portion of this zone. In addition, the two ballcourts, Structure Groups 50 and 61, are positioned along a broad N-S medial axis that bisects the core zone (FIG. 3). They appear to have been deliberately located with respect to the isolated pyramid, Structure 29. The westward medial axis of that structure intersects a point approximately equidistant from either ballcourt, and the north and south ends of its summit structures appear to be oriented toward Groups 61 and 50, respectively.[18]

16. An examination of the central precinct can be found in Freidel, loc. cit. (in note 1); idem, "Maritime Adaptation and the Rise of Maya Civilization: the View from Cerros," in B. Stark and B. Voorhies, eds., *Prehistoric Coastal Adaptations in Mesoamerica* (Academic Press: New York 1978) 239–265.

17. M. B. Cliff, "Lowland Maya Nucleation: a Case Study from Northern Belize," unpublished Ph.D. dissertation, Southern Methodist University (Dallas 1982).

18. V. Scarborough et al., "Two Late Preclassic Ballcourts at the Lowland Maya Center of Cerros, Northern Belize," *JFA* 9 (1982) 21–34.

The outer boundary of the core zone was clearly delimited by the 1200-m curvilinear canal, reflecting the radial dispersion of the community away from the central precinct. During the Tulix phase, the core zone extended over 34 ha and contained a population density of 1.21 individual house mounds per ha.

Periphery

The peripheral zone is defined by the area outside the main canal and within the arbitrary limits of the survey tract. The locations of structures in this zone do not appear to have been the result of any coordinated plan, and few civic structures were observed. A marked drop-off in the density of structures occurs in the interior of the bight, especially to the south along Transects 2 and 3. The distribution of structures along the present coastline, however, indicates a denser occupation than in the interior. Such a settlement pattern may have been produced by a service population engaged in petty exchange or maritime resource extraction outside the immediate control of the central precinct.[19]

The area examined within the peripheral zone encompasses 35 ha and is comparable to that in the core zone. The density of house mounds in this tract is 0.40 individual structures per ha during the Tulix phase.

Structure Typology

From a methodological point of view, the focus of the survey has been on spatial variability within and between mound groups. To deal with this variability, a working morphological typology of mounded features using form, size, and groupings was devised for the settlement zone. Tables 1 and 2 present the classification that was developed, due in part to the absence of standing masonry in the settlement. The settlement typology and excavation program included only the core and peripheral zones.

The typology was used to stratify the sample of mounds around the center and to provide the basis for selecting particular mounds for excavation in order to investigate social organization. It was hypothesized that the size and form of these mounds and mound groups would correlate roughly with the status of their occupants. Regardless of whether another family resident, ancestor, or relative of non-resident status was responsible for the initial construction of the mound (as opposed to the mound's occupant being responsible for its construction), the individual occupant's ability to elevate himself above others by residing on a larger or more complicated mound grouping may be seen as a reflection of his rank in the community. In addition, intrasite distance relationships were also expected to reveal elements of social organization related to the clustering of mound groups.[20]

Underlying this typology was the implicit assumption that the majority of mounds served a residential function. Recent information, however, suggests that this assumption must be reevaluated (TABLES 3–5). Most of the large and formally complex mounds within the core zone are now considered to be monumental civic architecture. Even though the functional justification for stratifying the mound excavation sample must be reassessed, it should be noted that the typology still stands on morphological grounds. Consequently it may prove appro-

Table 1. Structure types in the systematically surveyed and excavated settlement area.

Type	*Description*	*Frequency*
1	4 or more building platforms on a shared substructure	2
2	3 building platforms on a shared substructure	4
3	2 building platforms on a shared substructure	4
4	Substructure greater than 150 sq m and more than 1 m high	18
5	Substructure greater than 150 sq m and less than or equal to 1 m high	28
6	Substructure less than 150 sq m and less than or equal to 1 m high	34

Table 2. Structure type frequency and exposure in systematically surveyed and excavated settlement area.

Type	*Frequency*	*Number Tested*	*Percentage Tested*	*Total Exposure/ Stratum*
1	2	2	100	451 sq m
2	4	4	100	269 sq m
3	4	3	75	101 sq m
4	18	13	72	80 sq m*
5	28	6	21	74 sq m
6	34	7	21	45 sq m

*Excludes extensive exposure on Structure 29B.

19. Freidel, loc. cit. (in note 16).

20. After Kurjack, loc. cit. (in note 4); E. W. Andrews V et al., "Komchen: an Early Maya Community in Northwest Yucatán," paper presented at the Sociedad Méxicana de Antropología, in San Cristobal, Chiapas, 1981.

Table 3. Civic and residential construction and occupation frequencies through time (excavated sample).

*Mound Count**	*C'oh*		*Tulix*		*Early Classic*		*Late Postclassic*	
Total Mound Construction (52)	11	21%	33	62%	6	12%	2	4%
Total Mound Occupation† (52)	11	21%	13	25%	19	37%	8	15%
Combined Totals (52)	22	42%	46	88%	25	48%	10	19%
Civic Mound Construction (20)	4	20%	13	65%	3	15%	0	0%
Civic Mound Modification (20)	0	0%	4	20%	0	0%	0	0%
Civic Construction Inside Canal (17)	2	12%	12	17%	3	18%	0	0%
Civic Construction Outside Canal (3)	2	67%	1	33%	0	0%	0	0%
Residence Construction Inside Canal (20)	7	35%	12	60%	0	0%	1	5%
Residence Construction Outside Canal (12)	0	0%	8	67%	3	25%	1	8%
Total Residence Occupation Inside Canal‡ (37/71%)	11	30%	19	51%	12	32%	8	22%
Total Residence Occupation Outside Canal‡ (15/29%)	7	47%	8	53%	10	67%	2	13%
*Area Count**								
Total Mound Construction (35)	9	26%	21	63%	3	9%	2	6%
Total Mound Occupation† (35)	6	17%	8	23%	9	26%	6	17%
Combined Totals (35)	15	43%	30	86%	12	34%	8	23%
Civic Mound Construction (11)	2	18%	8	73%	1	9%	0	0%
Civic Mound Modification (11)	0	0%	3	27%	0	0%	0	0%
Civic Construction Inside Canal (10)	1	10%	8	80%	1	10%	0	0%
Civic Construction Outside Canal (1)	1	100%	0	0%	0	0%	0	0%
Residence Constuction Inside Canal (18)	7	39%	10	56%	0	0%	1	6%
Residence Construction Outside Canal (6)	0	0%	3	50%	2	33%	1	17%
Total Residence Occupation Inside Canal‡ (28/80%)	11	39%	15	54%	6	21%	6	21%
Total Residence Occupation Outside Canal‡ (7/20%)	2	29%	3	43%	5	71%	2	29%

*Occupation percentages need not add up to 100% due to the reoccupation of mounds through time.

†Excludes coeval construction loci. ‡Excludes utilized civic structures.

Parentheses indicate total possible within each category. Percentages refer to total within the systematic survey and excavation area.

priate for other sites where the principal objective of a typology is the stratification of the basic unit of analysis: mounded features.

Excavated Structures

This part of the program involved a series of 4 sq m test excavations dispersed throughout the 75 ha immediately surrounding the center. Moreover, in order to place the formal typology on a strong interpretive footing, extensive lateral exposure was carried out on at least one structure from each of the six structure types in the settlement. Excavation and recovery techniques included the screening of natural and architectural strata.

Mound groups were selected for test excavation from a stratified judgmental sample.[21] At minimum, a 20% sample was taken from each of the typological divisions in the mound typology (TABLE 2). The typological divisions with fewer mounds, however, were sampled more extensively. Specific mound selection within each type was determined by the desire to maintain a dispersed geographical representation of mounds and by fortuitous trash exposures revealed by natural agents (tree falls, erosional shoreline profiles, etc.). The judgmental sam-

21. C. L. Redman, "Multivariate Artifact Analysis: a Basis for Multidimensional Interpretations," in C. L. Redman, M. J. Berman, E. V. Curtin, W. T. Langhorne, Jr., N. M. Versaggi, and J. C. Wanser, eds., *Social Archeology: Beyond Subsistence and Dating* (Academic Press: New York 1978) 167.

Table 4. Civic and residential density figures through time (extrapolated from excavation sample to visible mound population).

*Mound Count**	*C'oh*		*Tulix*		*Early Classic*		*Late Postclassic*	
	No.	*Density*	*No.*	*Density*	*No.*	*Density*	*No.*	*Density*
Total Mound Construction (108)	23	0.33	68	0.99	13	0.19	4	0.06
Total Mound Occupation† (108)	23	0.33	27	0.39	40	0.58	16	0.23
Combined Totals (108)	45	0.65	95	1.38	52	0.75	21	0.30
Civic Mounds & Plaza Construction (25)	5		16		4		0	
Civic Mounds & Plaza Modification (25)	0		5		0		0	
Civic Construction Inside Canal (22)	3		16		4		0	
Civic Construction Outside Canal (3)	2		1		0		0	
Residence Construction Inside Canal (59)	21	0.62	35	1.03	0		3	0.09
Residence Construction Outside Canal (24)	0		16	0.46	6	0.17	2	0.06
Total Residence Occupation Inside Canal‡ (81)	24	0.71	41	1.21	26	0.76	18	0.53
Total Residence Occupation Outside Canal‡ (27)	13	0.37	14	0.40	18	0.51	4	0.11
*Area Count**								
Total Mound Construction (90)	23	0.33	57	0.83	8	0.12	5	0.07
Total Mound Occupation† (90)	15	0.22	21	0.30	23	0.33	15	0.22
Combined Totals (90)	39	0.57	77	1.12	31	0.45	21	0.30
Civic Mounds & Plaza Construction (16)	3		12		1		0	
Civic Mounds & Plaza Modification (16)	0		4		0		0	
Civic Construction Inside Canal (15)	1.5		12		1.5		0	
Civic Construction Outside Canal (1)	1		0		0		0	
Residence Construction Inside Canal (56)	22	0.65	31	0.91	0		3	0.09
Residence Construction Outside Canal (18)	0		9	0.26	6	0.17	3	0.09
Total Residence Occupation Inside Canal‡ (71)	28	0.82	38	1.12	15	0.44	15	0.44
Total Residence Occupation Outside Canal‡ (19)	6	0.17	8	0.23	13	0.37	6	0.17

*Density = count/ha. †Excludes coeval construction loci. ‡Excludes utilized civic structures.
Parentheses indicate total possible within each category.

ple was developed to take advantage of known surface indicators in order to achieve maximum data retrieval for minimum labor costs. Although the sample was not rigidly controlled geographically, every environmental and spatial sector of the community was tested.[22]

22. Scarborough, loc. cit. (in note 12) discusses microenvironments at Cerros. It should be noted that the decision to test a large percentage of Type 4 structures was a pragmatic one. Because preservation was generally good in this mound type and poor in Types 5 and 6, a greater number of Type 4 mounds were excavated in an attempt to further refine our architectural typology.

Testing Program

The purpose of the test excavation program in the settlement was threefold. First, it was to establish chronological control. This was accomplished primarily by penetrating and examining the contents of the mound. A sealed dating context was defined as primary material capped by an impenetrable layer of flooring or thick plaster melt. Unfortunately, few burial or cache offerings were found. Primary trash was identified as such by the presence of large (long axis greater than 10 cm), uneroded sherds from a single time period.

	Inside		Outside		
	Civic	Residential	Civic	Residential	Total
Total Number of Areas Excavated	10	18	1	6	35
Total Number of Mounds Excavated	17	20	3	12	52
Total Number of Areas *Visible*	15*	56†	1*	18†	90
Total Number of Mounds *Visible*	22*	59†	3*	24†	108
Total Surface Area in Hectares	34 (excluding center)		35		69

*Presumed civic
†Presumed residential

Table 5. Number of areas and mounds excavated and surveyed in the settlement, inside and outside the core area.

Although such material would generally be classified as midden or habitation debris at other sites, this assumption was not made at Cerros because bone, charcoal, and other domestic debris such as manos, metates, and other stone tools or debitage were sometimes absent from the deposits. Moreover, in some instances, the ceramics were deposited as part of a termination ritual marking the abandonment of civic structures,[23] and actually represented offerings rather than habitation debris. Because Late Preclassic pottery is easily broken into small bits (long axis of sherd less than 2 cm) and eroded when exposed, trampled, or transported and redeposited, sherd size and erosion could be used to detect these processes. In these situations chronological homogeneity of the excavated sherds, while always utilized, became a critical factor in determining whether or not the deposit was primary. Although deposits subjected to extended exposure prior to burial were not used to directly date mound construction, some deposits containing "freshly" redeposited sherds were. In all cases the redeposited material postdated the C'oh Phase, the *terminus post quem* of interest to this study.

The second intent of the testing program was to expose any architectural features that would aid in describing the structures from the perspective of a refined settlement typology. Exposure of well-preserved architecture in the settlement was also designed to aid in the identification of those mounded types deserving significant lateral excavation exposure. Unfortunately, the quality and quantity of architecture revealed in the limited exposures did not produce the correlations with the morphology of the mounds prior to excavation necessary to modify the typology itself.

The third focus of the testing program was to determine the function of structures. It was anticipated that certain kinds of information would be culled from our limited exposures which could be compared with the quality and quantity of information collected from our lateral stripping operations. In meeting this goal, the ceramics recovered proved to be most useful.

Functional Analysis of Ceramics

The functional analysis of the pottery from Cerros[24] indicated that the distribution of Late Preclassic ceramic types within a given context reflects definable social and behavioral phenomena. As a part of that study, seven excavated contexts containing well-defined primary habitation debris and trash were assigned a function. This was based on location within the community and degree of elaboration in the associated features and artifacts. The types were then plotted against these contexts. Table 6 illustrates the results for the two complexes of interest in this study. It should be noted that the two very rare types (Bribri Black Incised and Unslipped: Bribri Variety; and Iguana Creek White: Variety Unspecified) were eliminated from consideration because no more than 20 sherds of these types have been recovered at Cerros to date. Table 6 shows that the occurrence and relative

23. R. A. Robertson, "Functional Analysis and Social Process in Ceramics: the Pottery from Cerros, Belize," in R. M. Leventhal and A. L. Kolata, eds., *Civilization in the Ancient Americas: Essays in Honor of Gordon R. Willey* (University of New Mexico Press: Albuquerque 1983) 105–142; J. F. Garber, "Patterns of Jade Consumption and Disposal at Cerros, Northern Belize," *AmAnt* 48 (1983) 800–807.

24. R. A. Robertson-Freidel, "The Ceramics from Cerros: a Late Preclassic Site in Northern Belize," unpublished Ph.D. dissertation, Harvard University (Cambridge 1980).

Table 6. Functional assessment of ceramics.

	C'oh Deposits					*Tulix Deposits*						*Interpretation of Type*
Operation Number	1	33	34e	107	34w	1	33	34	35	111	34w	
Function Assessed by Excavation Evaluation	D/NE	D/NE	D/E	D/E	R	D/NE	D/E	D/E	R	R	R	
Chiculte Slipped Rim Striated	c	c	c	c								Domestic
Bobche Smudged	c	c	c	c								Domestic
Crabboe Washed	c	c	c	c								Domestic
Sierra Red: Society Hall	c	c	c	c								Domestic
Canop Red-on-Red Trickle			c	c	c							Elite
Cockscomb Buff			c	c								Elite
Teabox Unslipped	c	c	c	c	c							Domestic
Canxun Red	c	c	c	c	c							Domestic
Lanillo Groove Incised	c	c	c	c	c							Domestic
Xaxnik Through the Slip Incised	r	r	r	r	c							Spec. Occ.
Zorra Black-on-Red	r	r	r	r	m							Spec. Occ.
Matamore Dichrome: Matamore	r	r	r	r	m							Spec. Occ.
Tinta Usulutan	r	r	r	r	m							Spec. Occ.
Hokab Impressed					c							Ritual
Hole Dull: Hole					c							Ritual
Cassada Red-over-Black					c							Ritual
Paila Unslipped:												Non-elite
Unspecified	c	c				c						Domestic
Sapote Striated: Chacah	c	c	c	c	m	c	c	c	m	m	m	Domestic
Chamah Washed	c	c	c	c		c	c	c				Domestic
Sierra Red: Xaibe						c						Non-elite
Other Forms												
Sierra Red: Xaibe Form						c	c	c				Domestic
Sapote Striated: Chichem Variety						c	c	c	m	m	m	Domestic
Cabro Red						c	c	c	m	m	m	Domestic
Liscanal Groove Incised						c	c	c	m	m	m	Domestic
Pahote Punctated						c	c	c	m	m	m	Domestic
Tuk Red-on-Red Trickle							c	c	m	m	m	Elite
Nictaa Buff							c	c	m	m	m	Elite
Savannah Bank Usulutan: Unspecified						r	r	r	m	m	m	Spec. Occ.
Pixoy Usulutan						r	r	r	m	m	m	Spec. Occ.
Sangre Red						r	r	r	m	m	m	Spec. Occ.
Muñequita Appliqued									m	m	m	Ritual
Taciste Washed									m	m	m	Ritual
Kuxche Orange									m	m	m	Ritual
Remax Punctated									m	m	m	Ritual
Matamore Dichrome: Shipyard									m	m	m	Ritual
Chatoc Dichrome									m	m	m	Ritual
Zapatista Tickle-on-Cream Brown: Zoon									m	m	m	Ritual
Hole Dull: Hukup									m	m	m	Ritual

c = common occurrence; r = rare occurrence; E = elite; R = ritual
m = present in moderate frequencies; D = domestic; NE = non-elite

frequency of a type within a given context appears to be related to the nature of the context rather than to chronological factors. Subsequent analysis of other contexts has repeatedly confirmed this observation.

Using the resulting patterns, each type was assigned to one of five functional classes—general domestic, non-elite domestic, elite domestic, ritual, and special occasion. It was noted that general domestic pottery is found in all domestic contexts. Non-elite domestic pottery is restricted to non-elite contexts. Elite domestic pottery, however, is found not only in elite domestic contexts but in ritual ones as well. The same is true of the dominant red wares and some of the utility wares that have been classified as general domestic pottery.

In the initial study, the analyzed ritual contexts were restricted to deposits associated with the abandonment of monumental architecture. Later analyses, which included caches, burials, and civic structures, indicated that such ceramic types also occurred in those contexts, necessitating a broadening of the class to ritual/civic pottery. In contrast to the elite and the general domestic types, pottery of this kind is found only in ritual and/or civic contexts.

Special occasion types could have been interpreted as rare general domestic types, but within the ethnographic literature there is evidence that such rare domestic types are in fact the special occasion counterparts of everyday domestic vessels, used in weddings, household sanctifications, and other individual or family-oriented private rituals. It is distinguished from the general domestic pottery by surface treatment, size, and/or source.[25] At Cerros, some of the types match the patterns of distribution and the frequency of occurrence of their counterparts described in the ethnographic record. When these observations are coupled with the fact that the ancient Maya had such private rituals,[26] it seems only prudent to differentiate these types from domestic pottery.

Having established that these classes of pottery existed and were consistently identifiable in primary contexts, it was then possible to suggest functional interpretations for other excavated contexts using the ceramic data. When these ceramically-based interpretations were used in conjunction with the information derived from the architecture, settlement patterns, and excavations, it was possible to interpret the function of a given Late Preclassic structure with a higher degree of confidence than is usually possible in the Maya Lowlands.

Table 7 provides the initial construction data and the two functional assessments of the structures excavated at Cerros. The formal field identification is based on the criteria discussed below. In 23 of the 36 cases, the formal field identification and the ceramic assessment were the same. In 14 of these 23 cases, however, the ceramic data permitted a more precise functional interpretation of the structure. On the other hand, in 13 of the 36 cases the ceramic data were of no help either because the sample size was too small or because the initial construction of the mound dated to the Early Classic or the Late Postclassic. Unfortunately, given the condition, sample size, and stage of analysis of the ceramic material from these later time periods, similar interpretive reconstruction is not yet possible.

Residential Structure Identification: Architecture and Spatial Relationships

The Cerros settlement data have been used to treat the most elusive and recurrent problem in settlement pattern analysis: the identification of a house. The problem here is perhaps more extreme because of the poor preservation of ruins and the absence of dependable ethnohistoric continuities. These factors are a consequence of the amount of time that has elapsed since major construction and occupation of the site. Most settlement studies that have accurately approached the problem of household identification and population density have dealt with Late Classic and Postclassic populations.[27] The Cerros mound population has been affected by the passage of at least double that amount of time.

House mounds have been defined at Cerros through various independent checks. The size, complexity, and abundance of mounds generally have been the basis for identification, given the low frequency of dense domestic trash deposits and household features such as hearths and burials.[28] A high percentage of the domestic objects (fishnet weights, spindle whorls, etc.) and ceramic types (TABLE 6) from the settlement occurred in association with structures dating to the Late C'oh and Tulix phases (100 B.C.–100 A.C.). These kinds of pottery and other artifacts are generally taken to indicate the location of a household. In addition, there is reason to believe that ritual objects (such as jade fragments and painted stucco) and certain ceramic types (TABLE 6) are expectably less frequent in house mound locations than in those with

25. R. E. Reina and R. M. Hill, *Traditional Pottery of Guatemala* (University of Texas Press: Austin 1978); R. H. Thompson, *Modern Yucatecan Mayan Pottery Making*. *SAAMem* 15 (1958).

26. Alfred M. Tozzer, ed., *Landa's Relación de las Cosas de Yucatán*. *PapPeaMus* 18 (Harvard University: Cambridge 1941).

27. W. A. Haviland, *Excavation of Small Structures in the Northeast Quadrant of Tikal, Guatemala* (University Microfilms: Ann Arbor 1963); Pollock, loc. cit. (in note 11).

28. After W. A. Haviland, "Tikal, Guatemala and Mesoamerican Urbanism," *WA* 2 (1970) 186–198.

Table 7. Functional interpretation of structures excavated in the settlement.

Structure or Structure Group Number	*Formal Field Identification*	*Ceramic Assessment*	*Initial Construction Date*
9	civic facility	civic/ritual	Tulix
10	civic facility	indeterminate	EC
11	elite residence	elite residence	Tulix
13	residence	non-elite residence	Tulix
14	civic facility	indeterminate*	Tulix
15	residence	elite residence	L. C'oh
16	residence	elite residence	L. C'oh
18	residence	elite residence	Tulix
19	civic storage platform†	civic/ritual	Tulix
21	civic facility	indeterminate*	Tulix
22	residence	non-elite residence	Tulix
24	outbuilding	non-elite residence	L. C'oh
26	residence	non-elite residence	Tulix
29	civic facility	civic/ritual	Tulix
33	ground level residence	elite residence	L. C'oh
34	residence	elite residence	L. Tulix
38	residence	non-elite residence	L. C'oh
46	elite residence	indeterminate	EC
50	ballcourt	civic/ritual	Tulix
53-1st	residence	elite residence	L. C'oh
53-2nd	civic facility	civic/ritual	Tulix
54	civic facility	indeterminate*	Tulix
57	outbuilding	non-elite residence	Tulix
61	ballcourt	civic/ritual	L. C'oh
65	residence	indeterminate*	L. C'oh
66	residence	elite residence	Tulix
76	civic facility	civic/ritual	Tulix
77	residence	indeterminate	LPC
84	residence	indeterminate	EC
94	residence	indeterminate	LPC
98	residence	elite residence	Tulix
102	residence	indeterminate*	L. Tulix
112	docking facility	civic/ritual	Tulix
115	residence	elite residence	Tulix
116	residence	indeterminate*	Tulix
165	ground level residence	indeterminate*	Tulix

*Prohibitive sample size.

†Structure summit area is 1,280 sq m.

civic architecture.[29] Domestic objects and other small finds from the settlement are currently under study.[30]

Of the 21 excavated structures that were assigned a residence function, approximately 80% (17 mounds) were Type 4, 5, or 6. These structures are simple in form and comprise 74% of the mounds in the systematic survey and excavation area.

More than half (7) of the excavated Type 4 mounds were residences as indicated by both the ceramic and field criteria. The ceramic inventory also revealed that only two of these Type 4 mounds were civic facilities. Excavations on Structure 53 suggested that during the Late C'oh phase this functioned as an elite residence but, during the Tulix phase, took on a civic function. This was confirmed by both the formal field data and

29. J. F. Garber, personal communication.

30. See J. F. Garber, *Material Culture and Patterns of Artifact Consumption and Disposal at the Maya Site of Cerros in Northern Belize* (University Microfilms: Ann Arbor 1981).

the ceramic evaluations. Although clear architectural indications were lacking, the location of Structures 53 and 65, equidistant from the westward-facing Tulix phase Structure 29 and the two ballcourts, suggests an intentional civic plan.[31]

The excavated Type 5 mounds were assigned a residence function on the basis of the field and ceramic criteria outlined above, though small lots precluded a clear ceramic identification for approximately 50% of these mounds. Such criteria, however, did indicate that the other half of the mounds sampled were elite residences. The horizontal exposure of Structure 34 also revealed a small Tulix midden deposit off the eastern corner of the structure (FIG. 5), confirming a residential function for the structure.

The excavated Type 6 structures included five residences and two outbuildings. Except for the ground-level elite residence Structure 33, all of the structures assessed as residences produced non-elite domestic pottery. Structures 165 and 22 were horizontally stripped to test their residential function, but unfortunately neither produced distinctive household features. Structure 165 was a ground-level residential structure near the main canal. The outbuildings (Structures 24 and 57) were identified as such by their small size and close proximity to other mounds or features in the settlement. The pottery recovered in both cases was that typical of a non-elite residence.

More elaborate structures belonging to Types 1, 2, and 3 were also assigned a residential function. These raised plaza groups have from two to four additional structures on top of their plazas. In all cases within the systematically surveyed area, one of the summit structures is larger and more prominent than the others, an arrangement also present at Mayapan,[32] Tikal,[33] and other sites in the Lowlands. Their form may be related to the elevated status of a household head and his nuclear family. Presumably, members of the associated extended family would have occupied some of the remaining structures. The ceramic inventories from these more elaborate structures are those characteristic of elite residences. The exception, Structure 116, did not produce enough sherds for an evaluation.

As an example of this *plazuela* association, the Structure 11 group (FIG. 6) was horizontally stripped. Although little midden debris was located, the presence of painted stucco facading within an exterior wall niche, coupled with the overall architectural design of the structure, suggests that it was an elite dwelling.

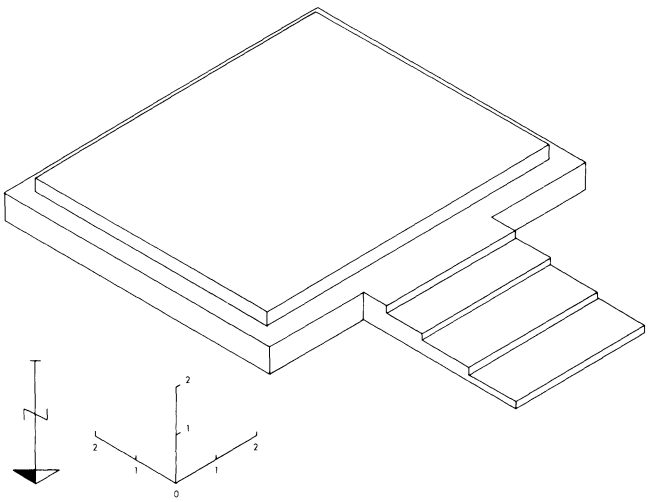

Figure 5. House platform Structure 34: a Type 5 residential structure.

The ceramic assessments permitted a further test of the functional significance of the mound typology. A comparison of mound volumes with ceramically-identified elite and non-elite residences did not prove to be useful, but a clear correlation was evident when the summit surface-area or presumed floor space of a residence (derived from 1:50 or larger scale contour maps)[34] was compared with the functional ceramic inventory.

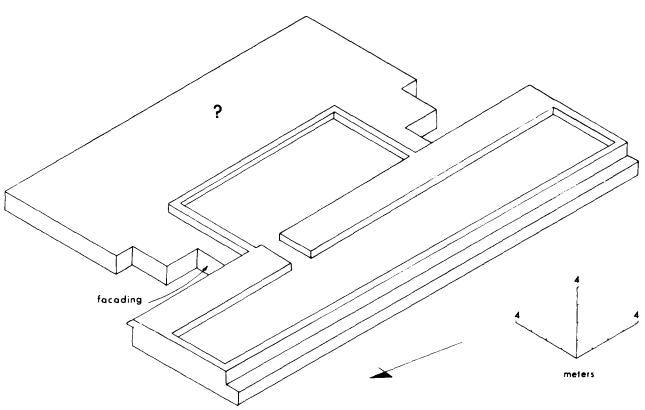

Figure 6. Elite house platform Structure 11B (the largest of three mounds). This is a Type 2 residential structure. The back third of the mound was not preserved and no doorway could be defined.

31. Scarborough, op. cit. (in note 18) 22.

32. A. L. Smith, op. cit. (in note 11) 218.

33. William A. Haviland, "Maya Settlement Patterns: a Critical Review," in E. W. Andrews IV et al., eds., *Archaeological Studies in Middle America. Middle American Research Institute Publication* 26 (Tulane University: New Orleans 1966) 31.

34. V. L. Scarborough, *The Settlement System in a Late Preclassic Maya Community*, unpublished Ph.D. dissertation, Southern Methodist University (University Microfilms: Ann Arbor 1981).

Consequently, summit surface area must be considered a better index of "eliteness" than are gross earth-moving expenditures of energy. Table 8 indicates that a structure summit area greater than 30 sq m is associated with elite residence. The only exception occurs on Structure 38. The recovery of nonceramic ritual objects from this locus,[35] however, may provide an explanation for this reversal of the norm.

Table 8. Late Preclassic residential function assessed.

Structure Number	*Summit Area in sq m*	*Ceramic Assessment*
98	160	elite residence
11B*	130	elite residence
116B*	120	indeterminate
115B*	100	elite residence
38	100	non-elite residence
15	96	elite residence
18	80	elite residence
66	80	elite residence
53	72	elite residence
16	48	elite residence
33	8†	elite residence
34	36	indeterminate
102	36	indeterminate
13	25	non-elite residence
26	24	non-elite residence
57	16	non-elite residence
24	16	non-elite residence
165	16	indeterminate
22	9	non-elite residence

*Largest structure in plazuela group.
†Limited flat test exposure.

Civic Structure Identification: Architecture and Spatial Relationships

Civic architecture is the other class of structure recognized at Cerros, defined as special-function buildings which do not incorporate the range of domestic activities carried out on house mounds. They were identified by their imposing size, unusual plan, elaborate masonry, and/or facades (the latter seldom preserved in situ) and, in the Tulix phase, by their spatial relationships to Structure 29.[36] Similarly, the ceramic inventory is distinctive and domestic objects are present in significantly lower percentages than in domiciles.[37]

Civic architecture has a greater variability in form than do the house mounds. Given the activity-specific function of many civic structures and the number of social and economic tasks performed at a Maya center, greater variability would be anticipated. This variability in form has been clarified by testing and by lateral exposures on representative mounds from the four mound types that arguably represent civic architecture.

In the Tulix phase, six excavated Type 4 structures have been interpreted as civic architecture. The amount of labor required to construct these simple but more imposing mounds would have been considerably greater than it would have been for the largest structures in Types 5 and 6. The 21,460 cu m of fill in Structure 29 and its supporting plaza, for example, represent the largest construction investment in the core zone, and extensive lateral exposure has revealed architectural details associated with a civic function in this case.[38]

Of the three Type 3 structure groups that were tested, the two Late Preclassic groups were assigned a civic function. Group 61 was unequivocally identified as a ballcourt[39] and Group 19 appears to be a storage platform. The Early Classic Group 46, on the other hand, appears to be a rural elite residence.

Within the four tested Type 2 structures, Groups 76 and 10 were assigned a civic function. They date to the Tulix phase of the Late Preclassic and to the Early Classic, respectively.

Both of the Type 1 structures were excavated. Group 50 is clearly a Tulix phase ballcourt (FIG. 7),[40] whereas Group 116 has a residential function (see above). Group 116 is outside the core zone and is located within the *bajo,* or internally-drained swamp, suggesting its residents may have played a managerial role in the raised field agriculture practiced at the site. If so, the residential function of this group would have had civic components that may account for its greater complexity.

Problems in Interpretation

Changes in the residential- and civic-structure populations through time are important indices for comparative purposes. In order to extract these data, two units of occupation and construction analysis were designed. Single-mound populations were estimated by counting all the mounded features individually. A plazuela group and all mounds in it were assigned a date on the basis of a single test unit, unless additional tests indicated that not all the mounds were contemporaneous. Although such inferential dating is common practice in the Maya

35. Garber, loc. cit. (in note 30).

36. Scarborough, loc. cit. (in note 34).

37. J. F. Garber, personal communication.

38. Freidel, loc. cit. (in note 13).

39. Scarborough, loc. cit. (in note 18).

40. Ibid.

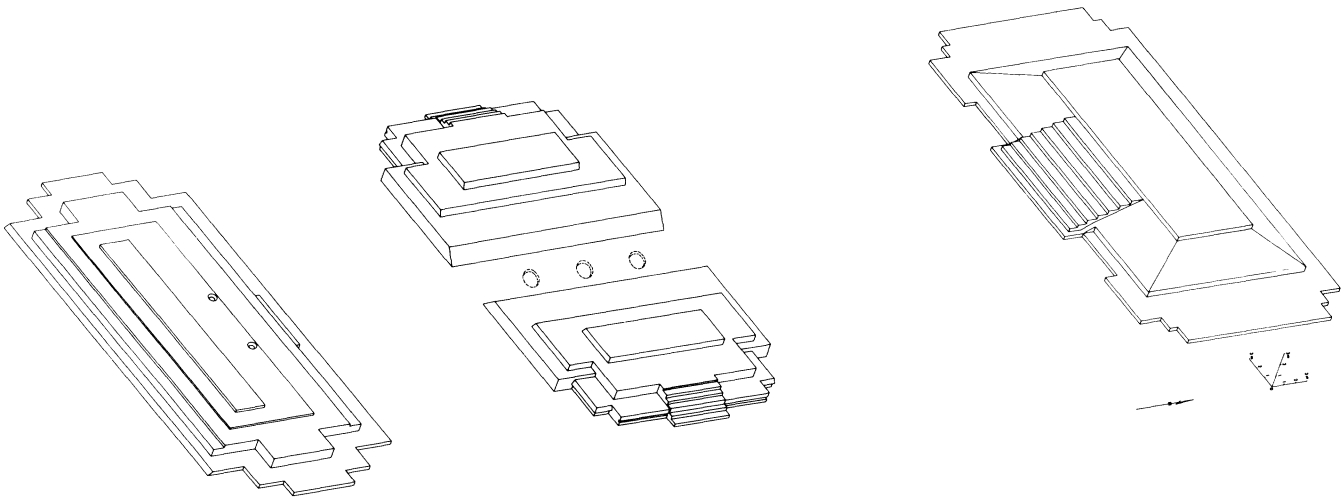

Figure 7. Ballcourt Structure 50. This is a Type 1 civic structure.

Lowlands,[41] it may give an inflated idea of the actual number of mounds constructed or occupied at any one time. For this reason an area-count assessment has been calculated (TABLES 3, 4).

The area count simply evaluates discrete occupation loci by weighting an entire plazuela as if it were a single mound. This figure is perhaps most meaningful when discussing reoccupation of a mound group. In these cases, residence upon each mound was probably unnecessary to create the observable distribution of ceramics and related litter. In both methods, plaza-type features have been excluded from the counts. Although these must be considered major construction expenditures, they only directly affect percentages of civic construction. In postulating the number and density of civic and residential structures in the systematic survey and excavation area (TABLES 4, 5), the functional identification of unexcavated structures was necessary. This was effected by comparing the individual structures with the sample of identified structures and was only possible after the excavation data had been collected.

A major problem with the Cerros data base is the presence of ground-level structures throughout the settlement. Although the issue has been an elusive one, many researchers have devoted a great deal of attention to it.[42] Puleston indicates that "hidden" dwellings at Tikal are most evident during the Early Classic period. Although they may continue through the entire occupational history of the site, Cerros ground-level dwellings are most significant during the Late Preclassic phases.

Cliff,[43] for example, has demonstrated the presence of ground-level structures along the coastline that date to all phases of the Late Preclassic period at Cerros. Moreover, because mound construction within the perimeter created by the canal apparently was restricted to the Late C'oh and Tulix phases, it seems that during the Early and Middle C'oh phase much, if not all, of the occupation of the dispersed settlement was at ground level. Actual human population estimates during the Late C'oh and Tulix phases for the site must be considered conservative until Cliff has analyzed the data. The structural density figures, however, are comparable to those at other Maya sites.[44]

A Settlement Reconstruction

Our excavation within the systematic survey and excavation area permit the discussion of developmental trends at Cerros following the initial occupation of the site during the Ixtabi phase.

C'oh Phase (200–50 B.C.)

In the Early and Middle C'oh phase most of the occupation of the dispersed settlement appears to have been

41. D. E. Puleston, *Ancient Maya Settlement Patterns and Environment at Tikál, Guatemala* (University Microfilms: Ann Arbor 1973); Rice and Rice, loc. cit. (in note 10).

42. William T. Sanders, *Prehistoric Ceramics and Settlement Patterns in Quintana Roo, Mexico. CarnInstPub* 606 (Washington, D.C. 1960); Haviland, loc. cit. (in note 27); Willey, loc. cit. (in note 7); Puleston, loc. cit. (in note 41).

43. Cliff, loc. cit. (in note 17).

44. Scarborough, loc. cit. (in note 34); idem, "Late Preclassic Northern Belize," *Status, Structure, and Stratification: Current Archaeological Reconstructions. Proceedings of the 16th Chacmool Conference* (Calgary 1985).

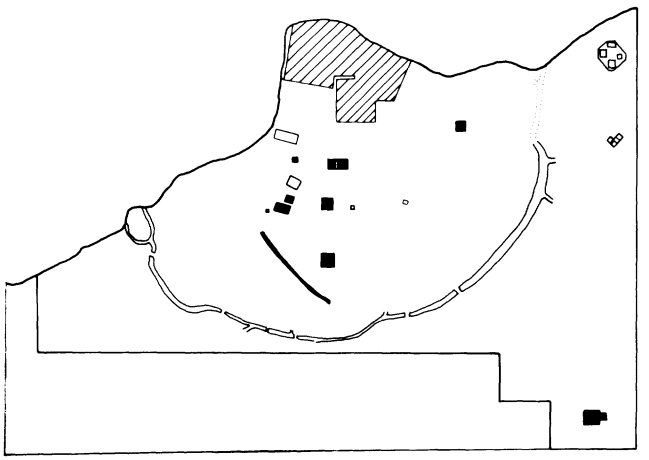

Figure 8. Distribution of C'oh Phase structures.

at ground level. During the Late C'oh, however, there was a substantial amount of residential construction in this area of the site. Within the core zone, eight of the excavated structures (area count) were built during the Late C'oh phase. Of these, six are house mounds, one is an outbuilding (Structure 24), and one is a ballcourt (Structure 61). Within the six house mounds, four are elite residences, one is indeterminate, and only one is a non-elite residence. It appears that with the successful development of intensive agriculture throughout northern Belize,[45] the energy investment in the construction of the main canal at Cerros in the Late C'oh phase,[46] and the growth of riverine exchange networks,[47] the emerging elites began to express their authority. They either moved away from the village nucleus or elevated themselves above the non-elite. These elites, however, apparently stayed within the boundaries of the canal, since no residential construction can be identified outside the core area (TABLES 3, 4; FIG. 8).

Most of the civic architecture dating to this phase underlies the present central precinct.[48] In the settlement, it was considerably less developed than that of the later Tulix phase. Only two excavated monumental structures, Structure 76 and Structure Group 61, can be reasonably associated with the Late C'oh phase. Structure 76 lies outside the core zone at a location midway between the main aguada 2 and the main canal. Despite its distance from the core area of the site, the construction fill of Structure 76B contained C'oh pottery. Thus it would seem that there was C'oh occupation in the vicinity of the mound. Its location may indicate that the structure played a role in linking the Early C'oh and perhaps even the Ixtabai occupants of these two areas. Even though Structure Group 61, one of the two ballcourts, was most heavily utilized during the Tulix phase, construction was initiated during the Late C'oh phase.

The construction of the main canal was initiated during the latter portion of the C'oh phase. It probably was built for rainwater catchment, with the bulk of the removed fill being used in the construction of the civic and residential space inside it, although a defensive role cannot be dismissed at this early date.[49]

The site appears to have been heavily occupied during the C'oh phase. Occupational loci for the C'oh phase have been defined as secondary deposits located in construction fill or primary trash sealed below mounded features. In the former instance, the condition of the sherds indicates that they were not transported any great distance. Therefore, they reflect the existence of a nearby ground-level occupation. Based on these criteria, it appears that 39% of the known occupation "area" inside the canal perimeter was utilized during the C'oh phase, while 29% of the known occupation space outside the canal was employed. An infield/outfield agricultural adaptation is posited,[50] although riverine exchange directed through the central precinct may account for the settlement attraction toward that area and the village nucleus.

Tulix Phase (50 B.C.–150 A.C.)

The Tulix phase occupation of the site represents the period of major civic construction. Nearly all the monumental architecture visible at the site can be shown to have been utilized during this phase, and at least 80% of all civic construction inside the canal dates to this time. Outside the canal the only civic construction was Structure 76D, which was added to the 76 group, suggesting the overall reuse of this group during this period (TABLES 3, 4; FIG. 9).

All of this grand construction corresponds with the

45. P. R. Bloom et al., "Prehistoric Maya Wetland Agriculture and the Alluvial Soils near San Antonio Rio Hondo, Belize," *Nature* 301 (1983) 417–419; A. H. Siemens, "Prehistoric Agricultural Use of the Wetlands of Northern Belize," in K. V. Flannery, ed., *Maya Subsistence: Studies in Memory of Dennis E. Puleston* (Academic Press: New York 1982) 205–222; B. L. Turner and P. D. Harrison, "Prehistoric Raised-Field Agriculture in the Maya Lowlands," *Science* 213 (1981) 399–405; Scarborough, loc. cit. (in note 14).

46. Scarborough, loc. cit. (in note 12).

47. Freidel, loc. cit. (in note 16); Scarborough, loc. cit. (in note 44).

48. D. A. Freidel, personal communication.

49. D. A. Freidel and V. Scarborough, "Subsistence, Trade and Development of the Coastal Maya," in Flannery, ed., op. cit. (in note 45) 131–151; Scarborough, loc. cit. (in note 12).

50. After R. M. Netting, "Maya Subsistence: Mythologies, Analogies, Possibilities," in Adams, ed., op. cit. (in note 1) 299–334.

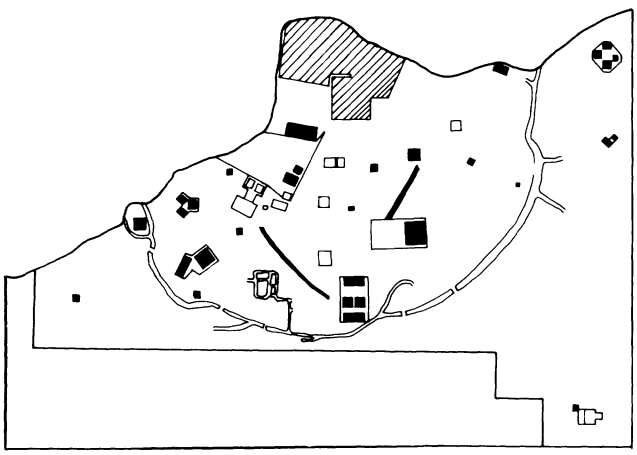

■ MOUND CONSTRUCTION
□ OCCUPATION LOCI
RAISED FIELDS

Figure 9. Distribution of Tulix Phase structures.

quarrying activities associated with the water management system.[51] The main canal was widened and dredged in at least one location, and raised field platforms were constructed in the core zone.

In addition to the civic monuments, residential construction was undertaken inside the canal. Approximately 60% of the house mounds inside the canal were constructed during the Tulix phase, indicating that the core was a residential zone. The density of house mound construction and occupation in this zone was 1.21 mounds/ha, demonstrating that the site was certainly not a vacant ceremonial center. In addition, more than a third of the house mounds in the core area were non-elite residences. In contrast, the house-mound density outside the main canal was 0.40 mounds/ha, suggesting a "dispersed compact" model[52] for the settlement during the Late Preclassic florescence. Even if the entire systematic survey area outside the canal is figured into the total (having an overall density of 0.75 mounds/ha), a hypothetical figure of only 0.40 mounds/ha can be derived from a Tulix context, given the 53% occupation total for this phase. It should be noted that the bajo area has not been subtracted from the density figures since occupation did occur in these areas with frequency.

There are, however, variations in the distribution of mounds outside the canal. Although the systematic survey and excavation area was defined during the 1978 season, more recent survey and reconnaissance has revealed a sizeable concentration of mounded features SW of the core zone. The mound density of this area, west of an arbitrary N-S trending line from the Structure 146 Group to the canal, is 1.23 mounds/ha (the nearest mound east of the Structure 146 Group lies 240 m away, suggesting a less arbitrary division of this area). If 53 of these mounds were occupied during the Late Preclassic (as has been indicated by the sample outside the canal in the systematic survey and excavation area), then an occupation density of 0.65 mounds/ha is hypothetically projected for this area. Thus the density drop-off outside the main canal is not significant along the coastline and in proximity to the New River until one approaches the first river terrace. In contrast, the two transect lines to the south, into the interior of the bight, indicate a density figure much lower than that provided by the southern-block periphery zone. A total density of 0.26 mounds/ha converts to 0.14 during the Tulix occupation, indicating a density drop-off in the interior. Consequently, it seems the western concentration represents an adaptation to riverine resources and exchange, with the service population engaged in petty trade along the shoreline.

Generally, this density drop-off outside the canal corresponds best to our understanding of the centralizing forces at work in a Maya center. Local exchange systems would have been coordinated and found to converge at the center. Additional support for this hypothesis comes from the construction of Structures 112 and 19 to the east and south of this area, respectively. Both are within the confines of the canal. Structure 112 has been interpreted as a port facility based on its immediate proximity to the shoreline, the presence of a ramp-like gradient rising from the shore to the mound's summit, and the generous projected summit surface area of the structure.[53] If this is the case, it contrasts with the earlier, but still functioning, dock previously associated with the village nucleus of the site,[54] in that it has little additional room for the storage of goods. Structure 19, by the same token, with its summit area of 1,280 sq m and slightly greater distance from the center and coast, seems to have been reserved for the storage of goods.[55] Perhaps the elites were exerting control over riverine exchange by controlling not only the reception of goods at the site but their distribution as well. Less supervised and more localized exchange could have taken place along the western shoreline and outside the canal, making settlement at this location advantageous to a subordinate service class. The production of agricultural products

51. Scarborough, loc. cit. (in note 12).

52. Puleston, loc. cit. (in note 41).

53. Scarborough, op. cit. (in note 34) 162–167.

54. Cliff, loc. cit. (in note 17).

55. See D. A. Freidel and J. A. Sabloff, *Cozumel: Late Maya Settlement Patterns* (Academic Press: New York 1984) for similar structures on Late Postclassic Cozumel Island.

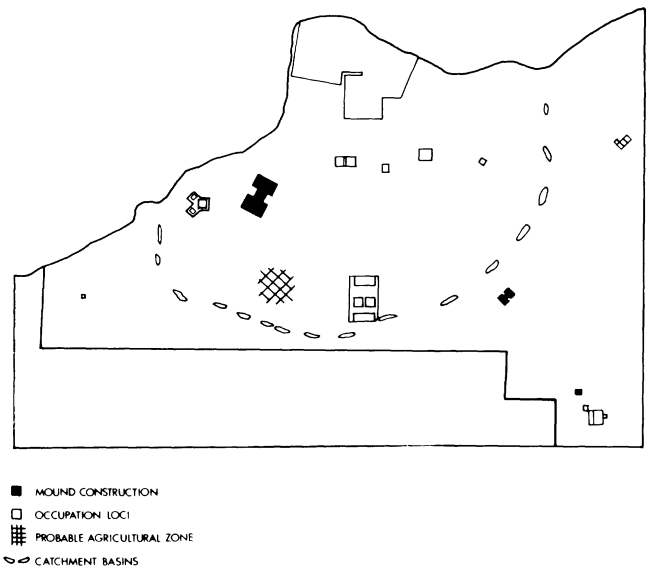

Figure 10. Distribution of Early Classic structures.

outside the canal for internal or external consumption is suggested, but clear empirical evidence is lacking.

Although the purview of this paper has been the Late Preclassic period, some discussion of the Classic and Postclassic periods is warranted. This brief treatment permits a clearer picture of later period densities at Cerros and underscores the relatively pure nature of the Late Preclassic components.

Classic Period

The Early Classic period at Cerros is identified by the construction of only one civic monument, Structure 10 Group, the bulk of which appears to have been built during this period. Overall mound construction at the site dropped to 12% of the total. Although a sizeable residential reoccupation was assumed initially, further analysis has shown that these later deposits were ephemeral and not indicative of permanent, long-term settlement. The evidence indicates that once a mound was constructed, it was used by all subsequent groups. Later utilization, however, was usually slight and resembles a sheet midden deposit covering the entire site. Much of this occupation represents use of former civic monuments that had been constructed by the end of the Tulix phase.

Although the zone outside the canal represents a slightly lower density of occupation (0.51 mounds/ha) than does the area inside (0.76 mounds/ha), two new house mound areas were constructed on the periphery. The main canal probably did not function as a major water control device but rather was modified to collect small reservoirs of water. Sections of the canal are breached by causeways or dams, suggesting that the original canal was an impediment to foot traffic (TABLES 3, 4; FIG. 10).

These data indicate that the site was not abandoned following the Tulix phase occupation; instead, it was based on a different land-use pattern because of an overall population decrease. The Early Classic adaptation probably was similar to the infield/outfield adaptation made during the C'oh phase, even though intensive agriculture in the form of raised fields may have continued in the immediate vicinity of the core zone. The more elaborate hydrology of the Tulix phase, however, was certainly beyond the organizational interests or capabilities of the Early Classic inhabitants. Although local exchange may have continued to support the residential population inside the canal, agriculture must have been the major subsistence mode. The community may have been attracted to the Tulix phase ruins because of the functional advantage of elevated ground near the shoreline, to say nothing of the former beauty and glory of the site. It would seem that the managerial elite had abandoned the site by the end of the Tulix phase. The service population and their descendants, on the other hand, adopted a new, less structured order.

Cerros was virtually abandoned during the Late Classic period. A cist containing Terminal Classic trash was exposed on Structure 50E of the ballcourt group, but no additional evidence for occupation has been found. The abandonment of the site during the Early Classic period is not well understood, although it has been suggested that exchange networks and political associations circumvented Lowry's Bight.[56] Alternatively, three sites in northern Belize indicate that a rise in sea level or a complementary landmass subsidence occurred immediately following the Late Preclassic period.[57] Given its proximity to the bay, Cerros would have been severely affected if the relative water level rose even a meter.

On the basis of present information, it may be said that the Early Classic period occupation of the core area was rather brief and was initiated by the former service population to revitalize the fallen Tulix center. (Ceramic analysis for this period has not progressed far enough to clearly assess the actual length of time the Early Classic

56. Scarborough, loc. cit. (in note 44).

57. Scarborough, loc. cit. (in note 12); Bloom, loc. cit. (in note 45); P. D. Harrison and B. L. Turner II, eds., *Pulltrouser Swamp: Ancient Maya Habitat, Agriculture, and Settlement in Northern Belize* (University of Texas Press: Austin 1983). The latter argue for raised field platforms which would have been inundated following the Late Preclassic period. W. J. Folan et al., "Paleoclimatological Patterning in Southern Mesoamerica," *JFA* 10 (1983) 453–468, also suggest a wet period during the Late Preclassic in the Maya Lowlands.

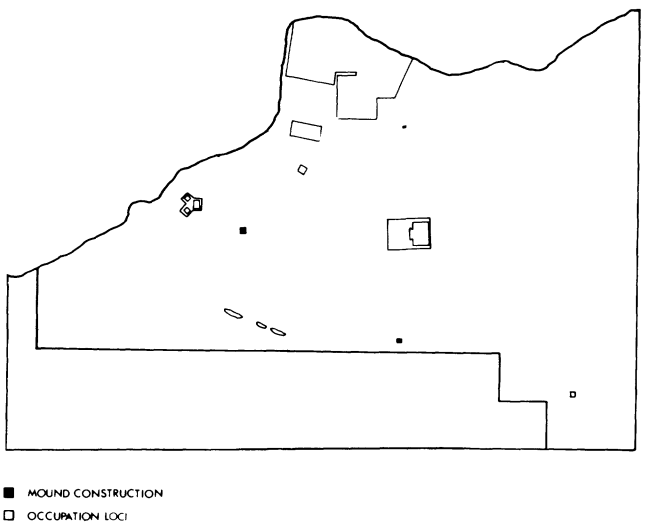

Figure 11. Distribution of Late Postclassic structures.

occupation may have continued at Cerros.) This effort emphasized the maintenance of the subsistence system to support the local population. With the abandonment of the center by the elites and the loss of centralized authority, however, the civic architecture eroded into disrepair. The canal network underwent sedimentation, and the general water catchment scheme failed. The environmental setting probably reverted to a condition not unlike that found at the site today, making the site nearly uninhabitable. Major reoccupation of the site would have required a considerable energy investment, an investment that was never realized again.

Late Postclassic Period

The Late Postclassic occupation at Cerros may span a greater period of time than the other phases described. Although this may have inflated the density estimates somewhat, these figures appear to indicate the same general trends revealed by the Early Classic occupation (TABLES 3, 4). The settlement configuration during this period probably is less reflective of deliberate Postclassic spatial design than it is of simple selection for available high ground (FIG. 11). The setting probably was very much like the present, although bush trails and cleared plaza space were likely the rule. No civic construction was carried out at any location in the settlement, and only two house mounds were built. Most of the monumental architecture, however, was reoccupied. An especially dense domestic trash deposit, for example, accumulated at the foot of Structure 9. Because the main canal probably was not utilized in any significant manner, density figures inside and outside the core zone are less meaningful. The overall density of reoccupation in the systematic survey and excavation area was approximately 0.30 mounds/ha. The adaptation made by these occupants is difficult to determine, but a variation of the "merchant pragmatism" model[58] may be suggested by the limited architectural investment,[59] and the rather rich Late Postclassic caches which have been recovered from the larger monumental structures. The Late Postclassic population configuration at Cerros is thought to be related to the growth and dominance of Santa Rita just three km across the bay.[60]

A growth model through time hardly seems appropriate for Cerros. The C'oh phase developed into the Tulix phase, while the Early Classic saw the reoccupation of the collapsed Tulix center. Sparse construction during the Early Classic, coupled with the nearly complete absence of Late Classic debris at the site, strongly suggests that the Early Classic adaptation was not a successful one. An attempt to maintain Late Preclassic traditions, given the new social order, probably spelled the eventual demise of the population. The absence of later Classic period occupation was a consequence of environmental factors to which the silting-in of the water catchment system contributed. Although the geographically commanding position of Cerros near the mouths of the New and Hondo Rivers was not altered, the energy investment necessary to revitalize the water catchment system would have been extremely costly. It was not until the Late Postclassic period and the rise of the materialistic trading colonies of the Yucatan coast that the geographic position and the potential of an immediate economic return outweighed the physical unpleasantness of the Cerros environment.

Conclusions

The settlement and ceramic data from Cerros permit a specific treatment of one kind of pre-state community development. After the initial colonization of Lowry's Bight, the community developed from a principally residential locus to a well-planned "central place" of civic monuments and residential space. Even though civic construction severely modified the landscape and produced a different residential adaptation to the site envi-

58. J. A. Sabloff and W. L. Rathje, "The Rise of a Maya Merchant Class," *SAm* 233 (1975) 72–82.

59. See P. D. Harrison, "The Lobil Postclassic Phase in the Southern Interior of the Yucatan Peninsula," in N. Hammond and G. R. Willey, eds., *Maya Archaeology and Ethnohistory* (University of Texas Press: Austin 1979) 189–207.

60. D. Z. Chase, "The Maya Postclassic at Santa Rita Corozal," *Archaeology* 33 (1981) 25–33.

ronment, the Late Preclassic population remained dense and increased through time. By the Tulix phase, the site reflects "synchorism,"[61] manifesting both civic attraction and residential aggregation. The growth of the community suggests the transition from an economy dependent upon local resources during its initial occupation to one focused on regional exchanges of goods and services during its final Late Preclassic occupation.[62]

The adaptation of a community to a compacted settlement design with substantial civic construction by the Late Preclassic period has evolutionary implications. Previous research in the Maya Lowlands suggests that the "dispersed compact" settlement adaptation was a recurrent adaptation made by later Classic period centers. In light of the Cerros data, the question becomes: why did the Maya continue this settlement design for some 1500 years, given the complexity of their institutions? In so doing they contradict much of what is known about state development and social control from other areas.[63] Although Maya centers had sizeable population aggregates and performed various "urban" functions, they seldom developed into cities in the manner of nucleated residential and civic centers found in highland Mexico. This is not to say that the Maya were incapable of founding and maintaining nucleated communities, as evidenced by Mayapan[64] and Chunchucmil.[65] Agricultural constraints were no more severe in the Lowlands than in the Highlands, as indicated by the extensive raised field systems identified throughout the Lowlands.[66] Although the Maya were aware of nucleated urban organization and the advantages of population centralization for social control, they opted to maintain a more dispersed settlement design.

The Maya developed a dispersed pattern of civic and household clusters which allowed the control and regulation of state institutions. Although the Maya appear to have changed their ritual orientation and their use of public vs. private space at various points in time, the dispersed-cluster settlement design was constantly present. This dispersed pattern, when compared with many other great civilizations, may have arisen as a condition of the unique semitropical environment of the Maya Lowlands. Numerous authors[67] have noted that a "rural elite" appears in the Maya area at varying distances from the central precincts and core areas of administrative centers. The appearance of relatively large civic structures away from centers also occurs with some frequency. From the speed at which the rain forest regenerates following initial bush-clearing operations, it is clear that, in the absence of continual cropping, the spatial limits of a community could be severely altered.[68] Without a representative from the central authorities in the rural areas, a support constituency might easily be physically lost.

A recent set of articles treating the concentric zonation model in the Maya area suggests that Late Classic vaulted structures (commonly associated with elite residence) reveal little decrease in density as one leaves the epicenter of large centers.[69] Elsewhere it is argued that elite house mound densities do decline in proportion to distance from these.[70] Although the Cerros data might be construed as somewhat equivocal, the need to define and monitor the hinterlands, even those in close proximity to the central precinct of a small center, is a necessity with respect to any socially-complex population. However, the "lost cities" of the Maya represent an exaggerated condition in which the dispersed population seems spatially intractable or at least difficult to marshal. The engagement of the population in public rituals and the presence of elite monitors would have provided greater cohesion and prevented any tendency toward corporate village autonomy.

Although a formidable literature has been compiled in support of the "swidden hypothesis," recent studies have challenged it. The corollary—that a dispersed settlement pattern resulted from a slash-and-burn agricultural adaptation—has been shaken, and evidence of intensive agriculture has been identified throughout the Yucatan Peninsula. Even so, the population remained more dispersed than was the case in other primary civilizations. Extended fallow periods can no longer be automatically accepted as a means of explaining the Maya settlement system. Clearly the Maya, with their energy and crea-

61. C. L. Crumley, "Toward a Locational Definition of State Systems of Settlement," *AmAnth* 78 (1976) 59–73.

62. Freidel, loc. cit. (in note 1).

63. See L. Krader, *Formation of the State* (Prentice Hall: Englewood Cliffs 1968); E. R. Service, *Origins of the State and Civilization: the Process of Cultural Evolution* (W. W. Norton and Co.: New York 1975); Sanders, loc. cit. (in note 2).

64. Pollock, loc. cit. (in note 11).

65. Vlcek, loc. cit. (in note 11).

66. Scarborough, op. cit. (in note 12) 721.

67. W. R. Bullard, Jr., "Maya Settlement Pattern in Northeastern Peten, Guatemala," *AmAnt* 25 (1960) 355–372; Puleston, loc. cit. (in note 41); J. E. Arnold and A. Forde, "A Statistical Examination of Settlement Patterns at Tikal, Guatemala," *AmAnt* 45 (1980) 713–726.

68. V. L. Scarborough, "Resourceful Landscaping: a Maya Lesson," *Archaeology* 38 (1985) 58–59,72.

69. Arnold, loc. cit. (in note 67).

70. W. A. Haviland, "Where Rich Folks Lived: Deranging Factors in the Statistical Analysis of Tikal Settlement," *AmAnt* 47 (1982) 427–429; W. J. Folan et al., "An Examination of Settlement Patterns at Coba, Quintana Roo, Mexico, and Tikal, Guatemala: a Reply to Arnold and Ford," *AmAnt* 47 (1982) 430–436.

tivity, were not limited by any one ecological factor, but perhaps one impinging environmental element—the rapid regeneration of the vegetational cover—repeatedly affected the course of settlement evolution.

Acknowledgments

We thank David Freidel, principal investigator for the Cerros Project, for the opportunity to work at Cerros. Beverly Mitchum and Susan Lewenstein provided valuable field assistance. Maynard Cliff, James Garber, Sorraya Carr, and R. Kimball Smith provided interpretive aid, both in the field and otherwise. Special thanks are extended to the editors, Peter Harrison, Howard Daudistal, and the two anonymous reviewers. Karim Sadr was responsible for much of the drafting. The project was funded by major NSF grants to David Freidel and S.M.U. as well as a dissertation improvement grant to Vernon Scarborough and S.M.U. We are indebted to Harriot Topsey, Archaeological Commissioner of Belize and the kind and diligent people of Chunox and Copperbank villages.

Vernon L. Scarborough was Director of the Meyer Pithouse Village Project at Fort Bliss, Texas. He has worked throughout the western United States and the Sudan. He was surveyor for the Cerros Project and is currently a Fulbright scholar in the Department of Archaeology at the University of Peshawar, Peshawar, Pakistan.

Robin A. Robertson is Associate Dean for General Education and a Visiting Assistant Professor in the Department of Anthropology at Southern Methodist University. She was ceramicist for the Cerros Project.